Signali i sustavi

AUDITORNE VJEŽBE 6

LS&S
FER – ZESOI

Kaskadna realizacija (Iterativne varijable stanja)

Zadatak 1.

Za sustav zadan prijenosnom funkcijom nacrtati model i napisati jednadžbe stanja *kaskadnom metodom*

$$H(s)=\frac{(s+2)(s+1)}{(s+3)(s+4)}.$$

- Rješenje:

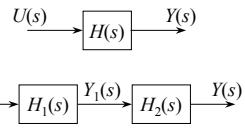

Kaskadna realizacija

- Faktoriziramo razlomak

$$H(s)=\frac{s+2}{s+3}\cdot\frac{s+1}{s+4}=H_1(s)\cdot H_2(s),$$

$$H_1(s)=\frac{s+2}{s+3},$$

$$Y_1(s)=H_1(s)\cdot U(s),$$

$$=\underbrace{\frac{s+2}{s+3}U(s)}_{X_1(s)},$$

$$X_1(s)=\frac{U(s)}{s+3}\Rightarrow \dot{x}_1=-3x_1+u, \qquad (1)$$

$$Y_1(s)=(s+2)\cdot X_1(s)\Rightarrow y_1=\dot{x}_1+2x_1=-x_1+u.$$

Kaskadna realizacija

$x_1' = -3x_1 + u$

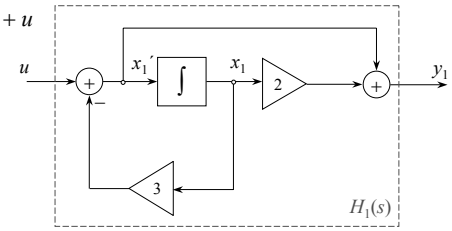

$$Y(s) = H_2(s)\cdot Y_1(s) = \underbrace{\frac{s+1}{s+4}\cdot Y_1(s)}_{X_2(s)},$$

$$X_2(s) = \frac{Y_1(s)}{s+4} \Rightarrow x_2' = -4x_2 + y_1 = -x_1 - 4x_2 + u. \qquad (2)$$

Kaskadna realizacija

$$Y(s) = (s+1)X_2(s) \Rightarrow y = x_2' + x_2 = -x_1 - 3x_2 + u.$$

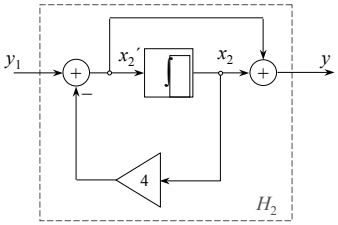

Kaskadna realizacija

- Jednadžbe stanja:

  $x_1' = -3x_1 + u,$

  $x_2' = -x_1 - 4x_2 + u.$

- Izlazna jednadžba

  $y = -x_1 - 3x_2 + u.$

$$\begin{bmatrix} x_1' \\ x_2' \end{bmatrix} = \begin{bmatrix} -3 & 0 \\ -1 & -4 \end{bmatrix} \begin{bmatrix} x_1 \\ x_2 \end{bmatrix} + \begin{bmatrix} 1 \\ 1 \end{bmatrix} \cdot u,$$

$$y = \begin{bmatrix} -1 & -3 \end{bmatrix} \cdot \begin{bmatrix} x_1 \\ x_2 \end{bmatrix} + 1 \cdot u.$$

Tipična donja trokutasta matrica
(kod kaskadne realizacije)

Kaskadna realizacija

Zadatak 2.

Za sustav zadan prijenosnom funkcijom nacrtati model i napisati jednadžbe stanja kaskadnom metodom.

$$H(s)=\frac{(s+1)(s+2)s}{(s+3)(s+4)(s^2+2s+2)}=\underbrace{\frac{s+1}{s+3}}_{H_1}\cdot\underbrace{\frac{s}{s+4}}_{H_2}\cdot\underbrace{\frac{s+2}{s^2+2s+2}}_{H_3}.$$

ne razbija se dalje, da ne dobijemo imaginarne koeficiente (–1±j)

$$U(s)\longrightarrow\boxed{H_1(s)}\xrightarrow{Y_1(s)}\boxed{H_2(s)}\xrightarrow{Y_2(s)}\boxed{H_3(s)}\xrightarrow{Y(s)}$$

Kaskadna realizacija

- H_1

$$Y_1(s)=H_1(s)\cdot U(s),$$

$$=\frac{s+1}{s+3}U(s),\quad X_1(s)$$

$$X_1(s)=\frac{U(s)}{s+3}\Rightarrow x_1'=-3x_1+u,$$

$$Y_1(s)=(s+1)\cdot X_1(s)\Rightarrow y_1=x_1'+x_1=-2x_1+u.$$

Kaskadna realizacija

- H_2

$$Y_2(s)=H_2(s)\cdot Y_1(s),$$

$$=\frac{s}{s+4}Y_1(s),\quad X_2(s)$$

$$X_2(s)=\frac{Y_1(s)}{s+4}\Rightarrow x_2'=-4x_2+y_1=-2x_1-4x_2+u,$$

$$Y_2(s)=s\cdot X_2(s)\Rightarrow y_2=x_2'=-2x_1-4x_2+u.$$

Kaskadna realizacija

- H_3

$$Y(s) = H_3(s)\cdot Y_2(s),$$

$$= \frac{s+2}{\underbrace{s^2+2s+2}_{Z(s)}} Y_2(s),$$

$$Z(s) = \frac{Y_2(s)}{s^2+2s+2} \Rightarrow z'' + 2z' + 2z = y_2,$$

realizirati direktnom metodom

$$\begin{aligned} x_3 &= z, \\ x_4 &= z' = x_3', \\ x_4' &= z'' = -2x_3 - 2x_4 + y_2, \\ &= -2x_1 - 4x_2 - 2x_3 - 2x_4 + u. \end{aligned}$$

Kaskadna realizacija

$$Y(s) = (s+2)\cdot Z(s) \Rightarrow y = z' + 2z = x_4 + 2x_3.$$

$$\begin{bmatrix} x_1' \\ x_2' \\ x_3' \\ x_4' \end{bmatrix} = \begin{bmatrix} -3 & 0 & 0 & 0 \\ -2 & -4 & 0 & 0 \\ 0 & 0 & 0 & 1 \\ -2 & -4 & -2 & -2 \end{bmatrix} \cdot \begin{bmatrix} x_1 \\ x_2 \\ x_3 \\ x_4 \end{bmatrix} + \begin{bmatrix} 1 \\ 1 \\ 0 \\ 1 \end{bmatrix} \cdot u,$$

$$y = \begin{bmatrix} 0 & 0 & 2 & 1 \end{bmatrix} \cdot \begin{bmatrix} x_1 \\ x_2 \\ x_3 \\ x_4 \end{bmatrix} + 0 \cdot u.$$

Trokutasti oblik "pokvaren" zbog direktne realizacije sekcije II reda

Kaskadna realizacija

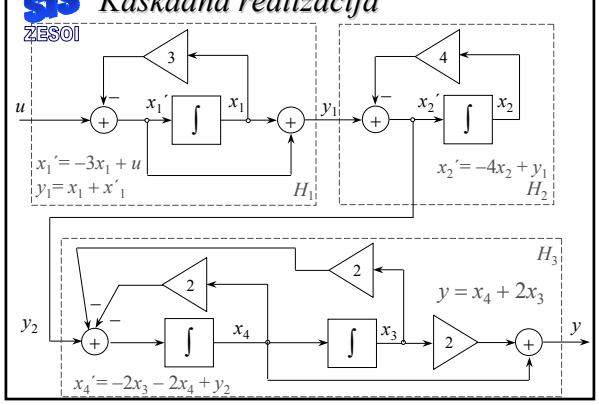

Paralelna realizacija (Kanonske varijable stanja)

$$H(s)=\frac{b_m s^m+\ldots+b_0}{a_n s^n+\ldots+a_0}=d_0+\frac{c_1}{s-s_1}+\ldots+\frac{c_n}{s-s_n}.$$

Rastav na parcijalne razlomke.

s_i, $i = 1,\ldots,n$ — jednostruki realni polovi.

$$d_0=\lim_{s\to\infty}H(s) \qquad c_k=(s-s_k)H(s)\big|_{s=s_k},$$

$$Y(s)=H(s)U(s)=d_0\cdot U(s)+\sum_{k=1}^{n}\underbrace{\frac{c_k}{s-s_k}U(s)}_{X_k(s)}.$$

Paralelna realizacija

$$X_k(s)=\frac{U(s)}{s-s_k}\Rightarrow x_k'=s_k\cdot x_k+u,$$

$$Y(s)=d_0U(s)+\sum_{k=1}^{n}c_kX_k(s)\Rightarrow y=d_0u+\sum_{k=1}^{n}c_kx_k.$$

Paralelna realizacija

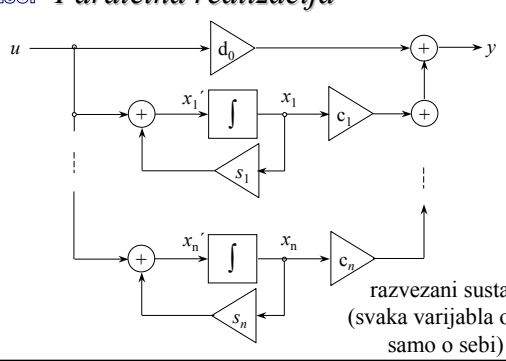

razvezani sustav (svaka varijabla ovisi samo o sebi)

Paralelna realizacija

Zadatak 1

Nacrtati simulacijski dijagram i napisati stanja pomoću kanonskih varijabli (paralelna realizacija)

$$H(s)=\frac{s^2+7s+12}{s(s+1)^2(s+2)}.$$

Rješenje:

$$H(s)=\mathrm{d}_0+\underbrace{\frac{\mathrm{c}_{11}}{(s+1)^2}+\frac{\mathrm{c}_{12}}{(s+1)}}+\frac{\mathrm{c}_{21}}{s}+\frac{\mathrm{c}_{31}}{(s+2)},\qquad \mathrm{d}_0=\lim_{s\to\infty}H(s)=0.$$

uočiti rastav višestrukog pola!!!

Paralelna realizacija

- Višestruki polovi

višestrukost pola s_i

$$\mathrm{c}_{ij}=\frac{1}{(j-1)!}\cdot\frac{d^{j-1}}{ds^{j-1}}\left[(s-s_i)^{\mu}H(s)\right]_{s=s_i},$$

$$\mathrm{c}_{11}=(s+1)^2\cdot H(s)\Big|_{s=-1}=(s+1)^2\cdot\frac{s^2+7s+12}{s(s+1)^2(s+2)}\Bigg|_{s=-1}=\ldots=-6,$$

$$\mathrm{c}_{12}=1\cdot\frac{d}{ds}\left[\frac{s^2+7s+12}{s(s+2)}\right]_{s=-1}=$$

$$=\frac{(2s+7)s(s+2)-(s^2+7s+12)(2s+2)}{[s(s+2)]^2}\Bigg|_{s=-1}=\ldots=-5,$$

$$\mathrm{c}_{21}=sH(s)\Big|_{s=0}=6,\qquad \mathrm{c}_{31}=(s+2)H(s)\Big|_{s=-2}=-1.$$

Paralelna realizacija, izbor varijabli stanja

$$Y(s)=-6\cdot\underbrace{\frac{1}{(s+1)^2}U(s)}_{X_1}-5\cdot\underbrace{\frac{1}{s+1}U(s)}_{X_2}+6\cdot\underbrace{\frac{1}{s}U(s)}_{X_3}-\underbrace{\frac{1}{s+2}U(s)}_{X_4},$$

$$X_1(s)=\frac{U(s)}{(s+1)^2}=\frac{X_2(s)}{s+1}\qquad\Rightarrow x_1'=-x_1+x_2,$$

$$X_2(s)=\frac{U(s)}{s+1}\qquad\Rightarrow x_2'=-x_2+u,$$

$$X_3(s)=\frac{U(s)}{s}\qquad\Rightarrow x_3'=u,$$

$$X_4(s)=\frac{U(s)}{s+2}\qquad\Rightarrow x_4'=-2x_4+u.$$

Paralelna realizacija

$$y = -6x_1 - 5x_2 + 6x_3 - x_4.$$

- Jednadžbe stanja: Jordanov blok, -1 višestruki korjen

$$\begin{bmatrix} \dot{x}_1 \\ \dot{x}_2 \\ \dot{x}_3 \\ \dot{x}_4 \end{bmatrix} = \begin{bmatrix} -1 & 1 & 0 & 0 \\ 0 & -1 & 0 & 0 \\ 0 & 0 & 0 & 0 \\ 0 & 0 & 0 & -2 \end{bmatrix} \cdot \begin{bmatrix} x_1 \\ x_2 \\ x_3 \\ x_4 \end{bmatrix} + \begin{bmatrix} 0 \\ 1 \\ 1 \\ 1 \end{bmatrix} \cdot u.$$

Paralelna realizacija

Izlazna jednadžba:

$$y = \begin{bmatrix} -6 & -5 & 6 & -1 \end{bmatrix} \cdot \begin{bmatrix} x_1 \\ x_2 \\ x_3 \\ x_4 \end{bmatrix} + 0 \cdot u.$$

- Za jednostruke polove u matrici A ostaju samo dijagonalni elementi.
- Za n – struke polove p javlja se Jordanov blok (n > 1).

Jordanov blok u općem slučaju:

$$\begin{bmatrix} p & 1 & 0 & 0 & 0 \\ 0 & p & 1 & 0 & 0 \\ 0 & 0 & p & 1 & 0 \\ 0 & 0 & 0 & p & 1 \\ 0 & 0 & 0 & 0 & p \end{bmatrix} n = 5$$

Blok dijagram (realizacija):

$x_1' = -x_1 + x_2, \quad x_2' = -x_2 + u, \quad x_3' = u, \quad x_4' = -2x_4 + u.$

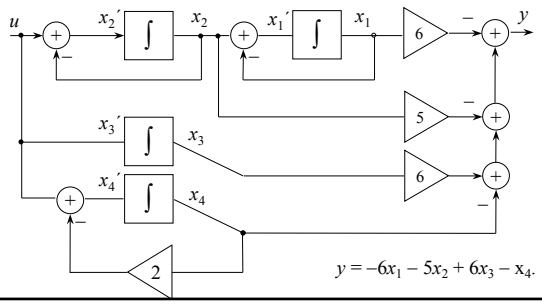

$y = -6x_1 - 5x_2 + 6x_3 - x_4.$

Zadatak 2., paralelna realizacija

$$H(s) = \frac{(s+2)\cdot(s+1)}{(s+3)\cdot\underbrace{(s^2+4s+5)}},$$

$s_{1,2} = -2 \pm j \Rightarrow$ konjugirano kompleksna rješenja

$$H(s) = d_0 + \frac{C_1}{s+3} + \frac{C_2 \cdot s + C_3}{s^2+4s+5},$$

$$d_0 = \lim_{s\to\infty} H(s) = 0,$$

$$C_1 = (s+3)H(s)\big|_{s=-3} = 1.$$

nastavak

- C_2 , C_3 = ?
- Metoda jednakih koeficijenata.

$$H(s) = \frac{(s+2)(s+1)}{(s+3)(s^2+4s+5)} = \frac{1}{s+3} + \frac{C_2 \cdot s + C_3}{s^2+4s+5},$$

$$\frac{s^2+3s+2}{(s+3)(s^2+4s+5)} = \frac{s^2+4s+5+(C_2 \cdot s + C_3)\cdot(s+3)}{(s+3)(s^2+4s+5)}.$$

nastavak

- Izjednačimo brojnike

$$s^2+3s+2=s^2(1+C_2)+s(4+3C_2+C_3)+(5+3C_3),$$

$$1+C_2=1 \qquad \Rightarrow C_2=0,$$

$$5+3C_3=2 \qquad \Rightarrow C_3=-1,$$

$$4+3C_2+C_3=3,$$

$$4+3\cdot 0-1=3,$$

$$3=3.$$

nastavak

$$H(s)=\frac{1}{s+3}-\frac{1}{s^2+4s+5},$$

$$Y(s)=H(s)\cdot U(s)=\frac{1}{s+3}U(s)-\frac{1}{s^2+4s+5}U(s),$$

$$X_1(s)=\frac{U(s)}{s+3} \qquad \Rightarrow x_1^{'}=-3x_1+u,$$

$$X_2(s)=\frac{U(s)}{s^2+4s+5} \qquad \Rightarrow x_2^{''}+4x_2^{'}+5x_2=u,$$

$$x_2^{'}=x_3,$$

$$x_3^{'}+4x_3+5x_2=u,$$

$$x_3^{'}=-5x_2-4x_3+u.$$

nastavak

$$Y(s)=x_1(s)-x_2(s),$$

$$y=x_1-x_2.$$

$$\begin{bmatrix} x_1^{'} \\ x_2^{'} \\ x_3^{'} \end{bmatrix}=\begin{bmatrix} -3 & 0 & 0 \\ 0 & 0 & 1 \\ 0 & -5 & -4 \end{bmatrix}\cdot\begin{bmatrix} x_1 \\ x_2 \\ x_3 \end{bmatrix}+\begin{bmatrix} 1 \\ 0 \\ 1 \end{bmatrix}\cdot u.$$

Matrica A nije dijagonalna i nema samo Jordanove blokove.

$$y=\begin{bmatrix} 1 & -1 & 0 \end{bmatrix}\cdot\begin{bmatrix} x_1 \\ x_2 \\ x_3 \end{bmatrix}+0\cdot u.$$

nastavak

$$x_1' = -3x_1 + u,$$
$$x_2' = x_3, \qquad y = x_1 - x_2.$$
$$x_3' = -5x_2 - 4x_3 + u,$$